Created on 01.02.2021
Modified on 14.07.2022

No. 20 1854

Product Information

Product Brand: Roto Patio

Patio Inowa Anti-Tilt Device

Additional component SH : SW > 2 : 1

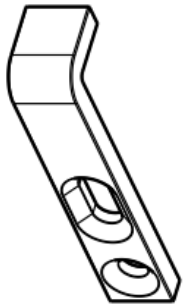

Related Products

Roto Patio
New product

Application range

Patio Inowa profile systems timber, PVC and aluminium.

Aluminium:

- Sash width 600mm - 2000mm
- Sash height 1000mm - 2500mm

see application diagrams in the appendix.

PVC and timber:

- Sash rebate width 710mm - 2000mm (PVC)
- Sash rebate width 600mm - 2000mm (Timber)
- Sash rebate height 1000mm - 2500mm

see application diagrams in the appendix.

Sash weight maximum of 200 kg

Aspect ratios sash height : sash width SH : SW = maximum of 3 : 1.*

* Profile specific information in the next updated installation instructions IMO_282, IMO_402 and IMO_493 chapter SH : SW = 3 : 1.

Created on 01.02.2021
Modified on 01.02.2021

No. 20 1854

Technical Details

The new anti-tilt device ensures a reliable hold of sliding sash with an unfavorable aspect ratio in the running rail when opening and closing.

As a result, aspect ratios of the sash SH : SW are released from the previous 2 : 1 to a maximum of 3 : 1.

The accessory is installed on the upper corners of the sliding sash (see sketch in the appendix).

Further information and assembly instructions in the appendix.

Documentation

Updated installation instructions IMO_282, IMO_402 and IMO_493.

Availability / Ordering ability

Available.

Product Overview

Material No.	EAN no.	Description	PU	Price/Pcs.	Material Size	D-MG	Spout Material
840239	4036263471277	PIN ANTI TILT DEVICE	1 PC	4,79	92		

Created on 01.02.2021
Modified on 01.02.2021

No. 20 1854

Product Information

Product Brand: Roto Patio

Patio Inowa Anti-Tilt Device

Additional component SH : SW > 2 : 1

Related Products

Roto Patio
New product

Scope

Patio Inowa profile systems timber, PVC and aluminium.

Aluminium:

- Sash width 600mm - 1500mm
- Sash height 1000mm - 2500mm

see application diagrams in the appendix.

PVC and timber:

- Sash rebate width 710mm - 2000mm (PVC)
- Sash rebate width 600mm - 2000mm (Timber)
- Sash rebate height 1000mm - 2500mm

see application diagrams in the appendix.

Sash weight maximum of 200 kg

Aspect ratios sash height : sash width SH : SW = maximum of 3 : 1.*

* Profile specific information in the updated installation instructions IMO_282, IMO_402 and IMO_493 chapter SH : SW = 3 : 1 (available appr. week 12 / 2021).

Created on 01.02.2021
Modified on 14.07.2022

No. 20 1854

Technical Details

The new anti-tilt device 897049 ensures a reliable hold of sliding sash with an unfavorable aspect ratio in the running rail when opening and closing.

As a result, aspect ratios of the sash SH : SW are released from the previous 2 : 1 to a maximum of 3 : 1.

A combination of anti-tilt devices with SoftClose, SoftOpen and SoftStop is not possible.

The accessory is installed on the upper corners of the sliding sash.

The mounting holes are pre-drilled using the 2000345 drilling jig.

The anti-tilt device is only permitted for systems with a double-walled running rail. This prevents the carriage from derailing.

The necessary installation space is determined within the profile check.

Further information and assembly instructions in the appendix.

Documentation

Next updated installation instructions IMO_282, IMO_402 and IMO_493.

Availability / Ordering ability

Available from week 42 / 21.

Product Overview

Material No.	EAN no.	Description	PU	Price/Pcs.	Material Size	D-MG	Spout Material
897049	4036263490391	PIN ANTI-TILT DEVICE STEEL	1 PC	4,79	92		
2000345	4036263495419	PIN DRILLING JIG ANTI-TIILT DEVICE	1 PC	57,49	02		

Created on 27.04.2022
Modified on 27.04.2022

No. 22 NX P FAA

ProductInformation

Product Brand: Roto NX

Roto NX hinge side P turn-only sash rebate stay with increased gasket pressure

Related Products

Roto NX
New product

Technical Details

Die unten genannten Roto NX P Falzaxer werden mit einem höheren voreingestellt Anpressdruck ausgeliefert.

Die praktische Erhöhung des Anpressdrucks ist von Profilgeometrie, Banddurchgang und Dichtungsdruck abhängig.

Technical Details

The Roto NX P rebate stay mentioned below are delivered with a higher preset gasket pressure.

The practical increase of the gasket pressure depends on the profile geometry, hinge passage and gasket.

Product Overview

Material No.	EAN no.	Description	PU	Price/Pcs.	Material Size	D-MG	Spout Material
795208		NX DF FAA P 2013 L APD+_SIL					
795209		NX DF FAA P 2013 R APD+_SIL					
895165		NX DF FAA P 2013 L APD+_R072					
895166		NX DF FAA P 2013 R APD+_R072					

Appendix to PI 20 1854

Roto Patio Inowa Anti-Tilt Device

Additional component with drilling jig to expand the aspect ratio to SH : SW 3:1 (previously or without anti-tilt device max. 2:1)

897049 PIN ANTI-TILT DEVICE STEEL

2000345 PIN DRILLING JIG ANTI-TILT DEVICE

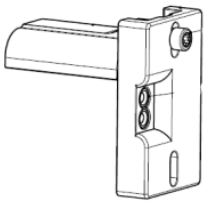

Table of contents | Page

1. Application ranges

The tilt protection extends the permissible ratio of sash height to sash width to a maximum of 3: 1.
The sash widths and sash heights of the Inowa system remain unchanged.

- **Inowa aluminium profile systems**
  - Sash width 600 mm – 2000 mm
  - Sash height 1000 mm – 2500 mm
- **Inowa PVC and timber profile systems**
  - Sash rebate width 710 mm – 2000 mm (PVC)
  - Sash rebate width 600 mm – 2000 mm (Timber)
  - Sash rebate height 1000 mm – 2500 mm
- **Sash weight maximum 200 kg**
- **Ratio of sash height to sash width SH : SW = max 2:1*/****
  With additional component "Anti Tilt Device":
- **Ratio of sash height to sash width SH : SW = max 3:1*****

*Applicable document: for aluminium profile latest Roto installation instructions IMO_282.
**Applicable document: for PVC/Timber profiles latest Roto installation instructions IMO_402 / IMO_493.
***Profile-specific see instructions in updated installation instructions **SH : SW = 3:1**.

A combination of anti-tilt devices with the following hardware components is not possible:

- SoftClose, SoftOpen and SoftStop

2. Extended application diagram aluminum profile systems for SH : SW = 3 : 1

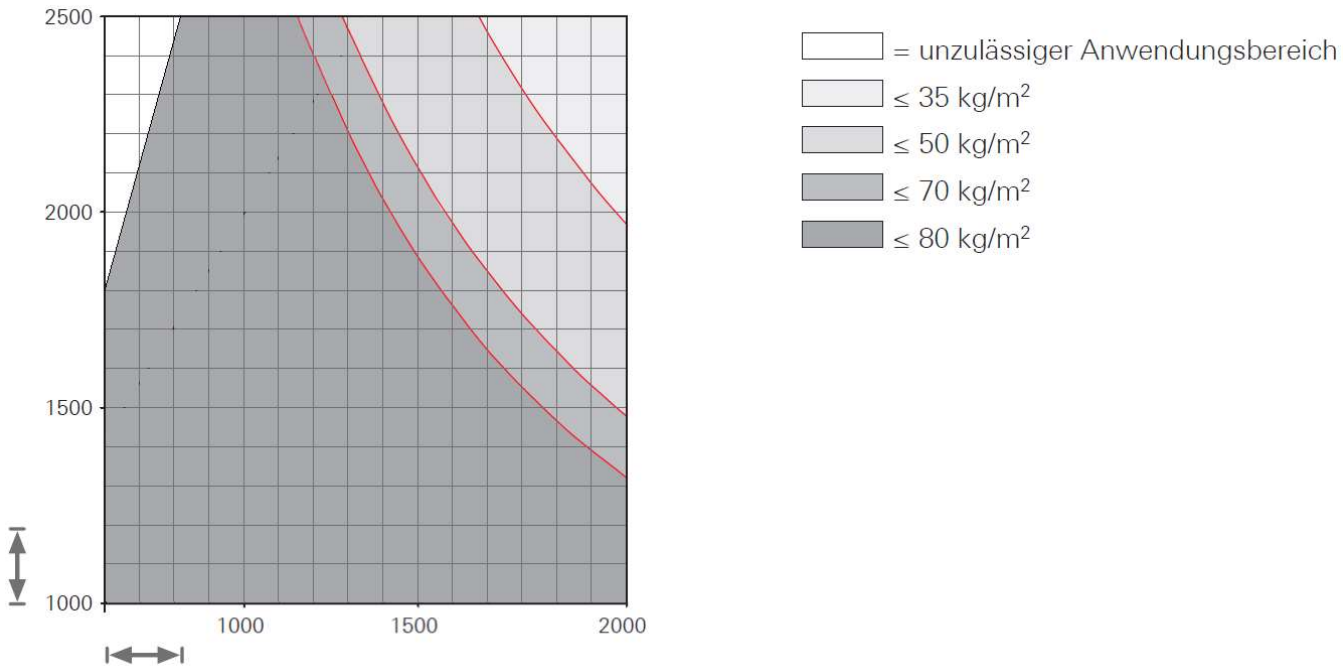

3. Extended application diagram PVC/Timber for SH : SW = 3 : 1

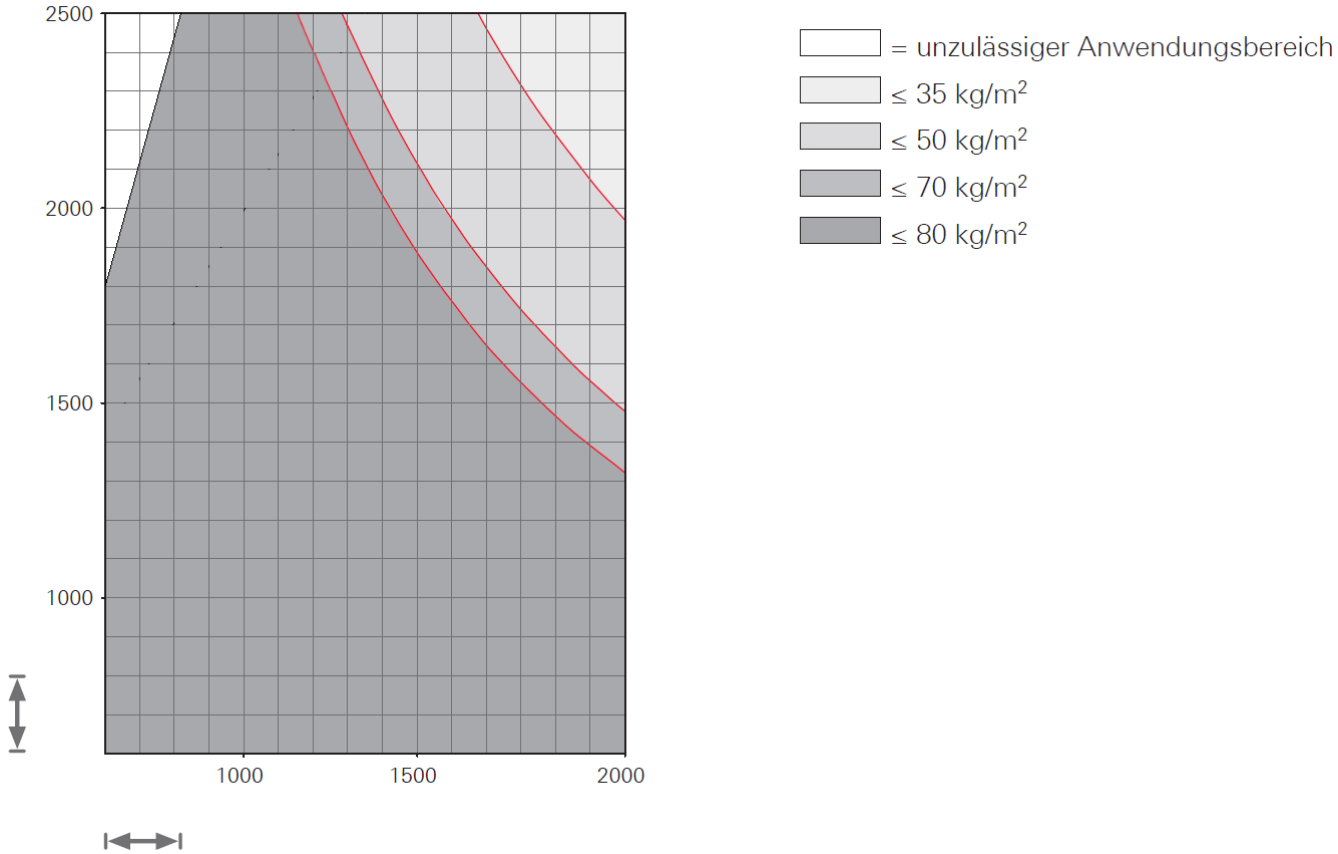

4. Installation instructions for the anti-tilt device 897049 with sash aspect ratios SH : SW > 2:1

Extreme aspect ratios with a height : width of the sash up to max. 3: 1 can be achieved with the installation of the additional anti-tilt device (required from > 2: 1).

Anti – tilt device 897049

In order to avoid lifting and tilting of narrow sliding sashes, two anti-tilt devices must be installed. The two anti-tilt devices are located on the front at the upper corners, i.e. on the espagnolette- and center break side. The positions are visually identifiable with red dots in the illustrated sketch below:

Please note: When changing the profile system, take the dimensions of the anti-tilt devices into account.

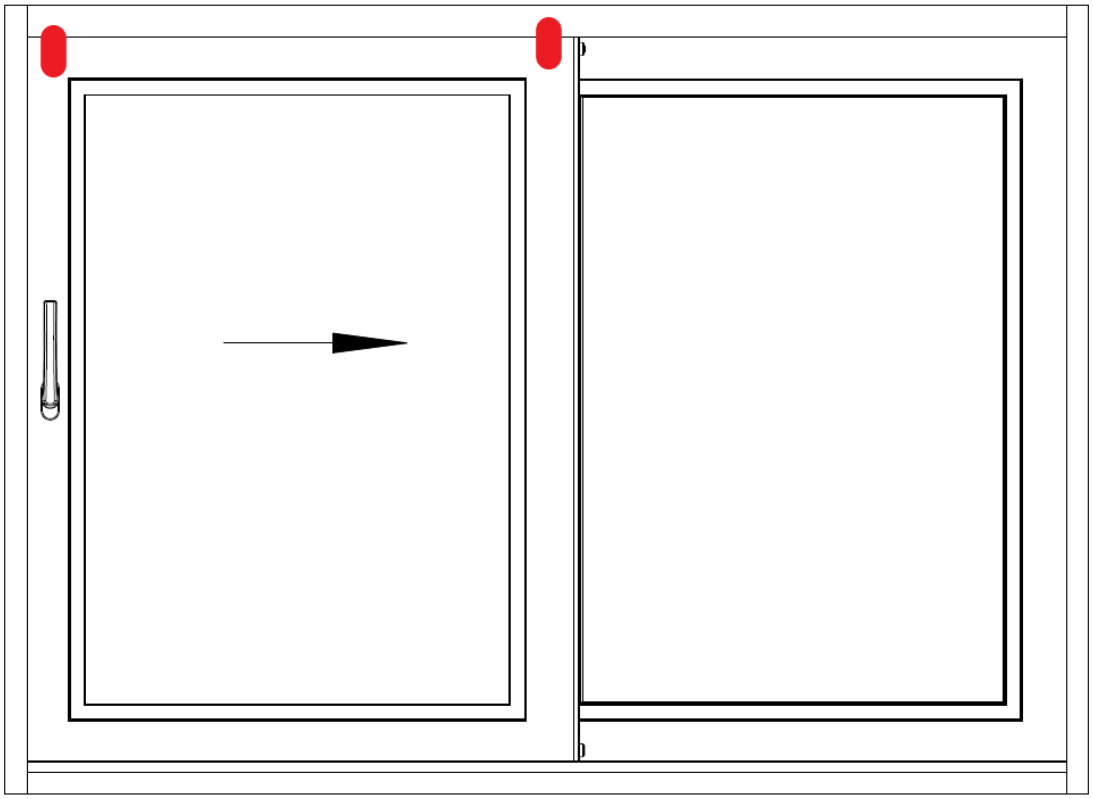

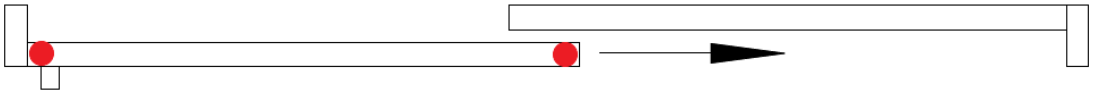

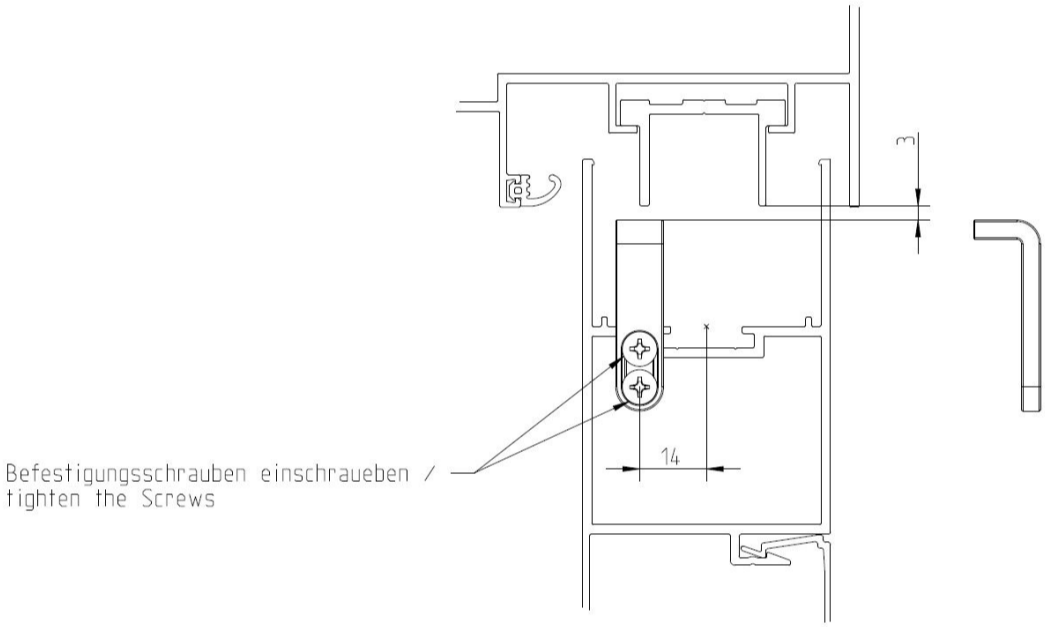
3
14
Befestigungsschrauben einschraueben /
tighten the Screws

Space for mounting the anti-tilt device 897049

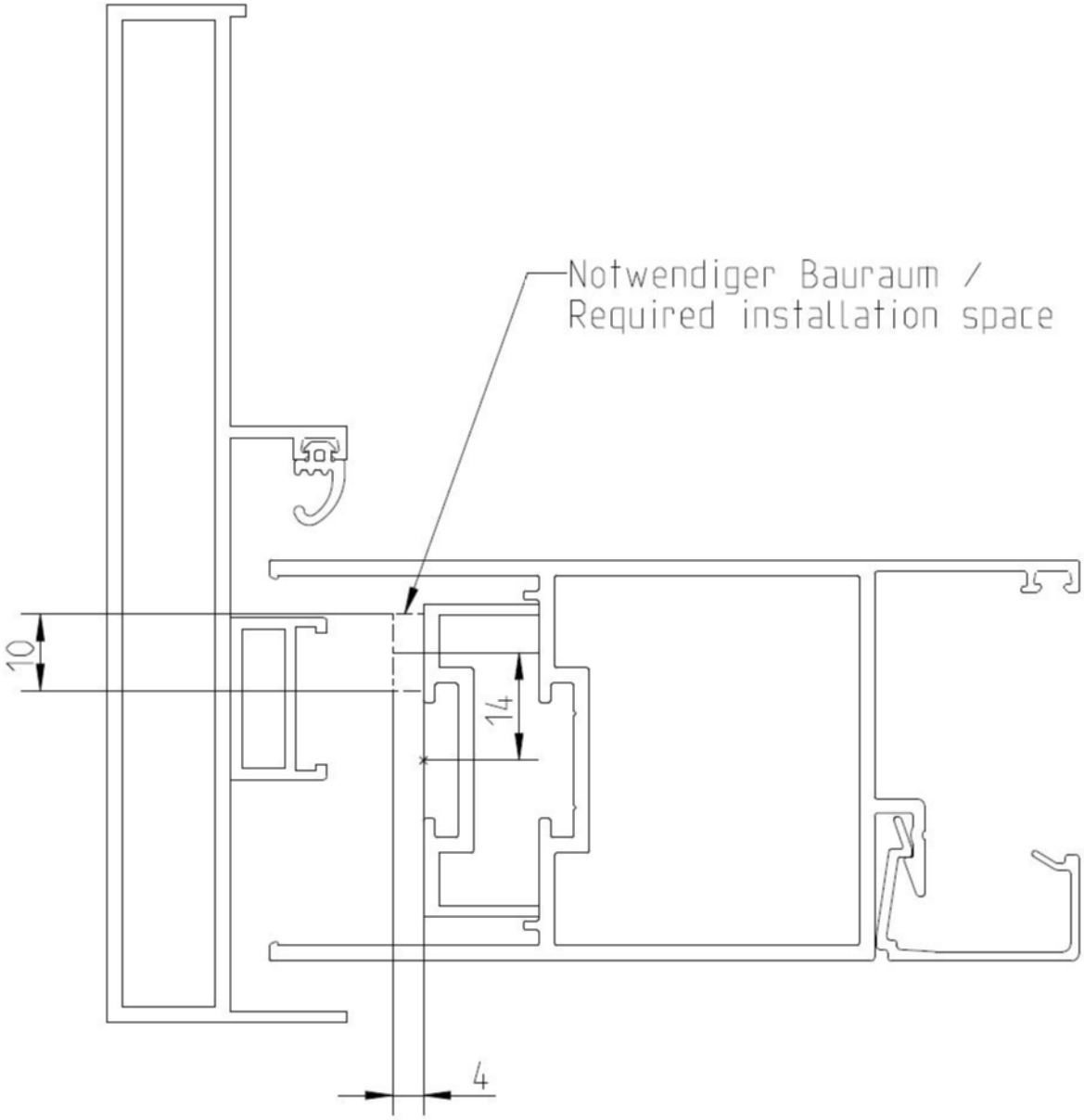

Installation of the anti-tilt device with the aid of the drilling jig

The anti-tilt device can be mounted on the loose sash or on the sash that is already attached.

The drilling jig 2000345, which can be used on the left and, after a short conversion also on the right, is available as an aid.

Variant 1: Drilling on the loose sash

1. Take dimension X for setting the drilling jig from the profile check

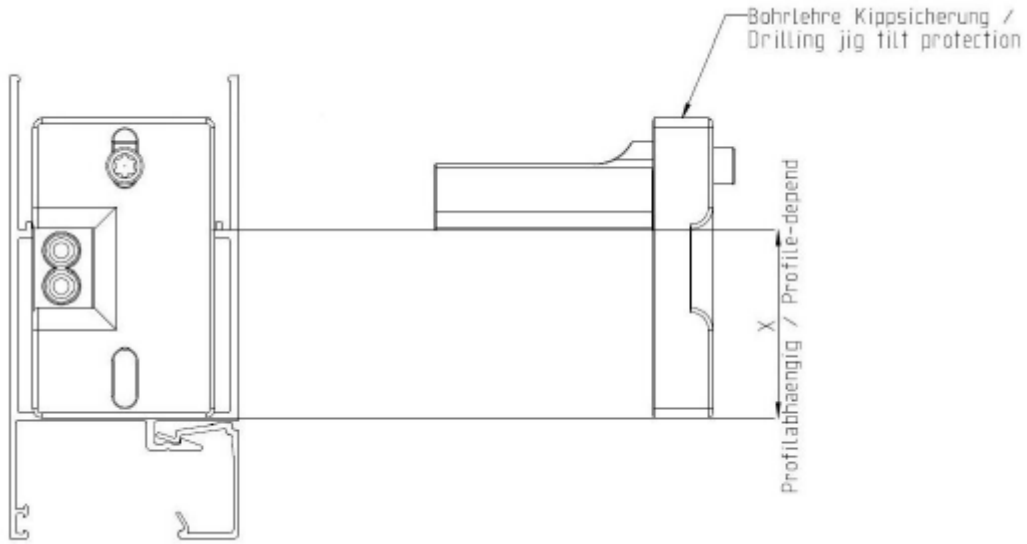

2. Set dimension "X" on the drilling jig

3. Position the drilling jig and drill 2 x Ø 3.5 mm holes on the drilling jig

4. Mount the sash

5. Fasten the anti-tilt device with 2 screws

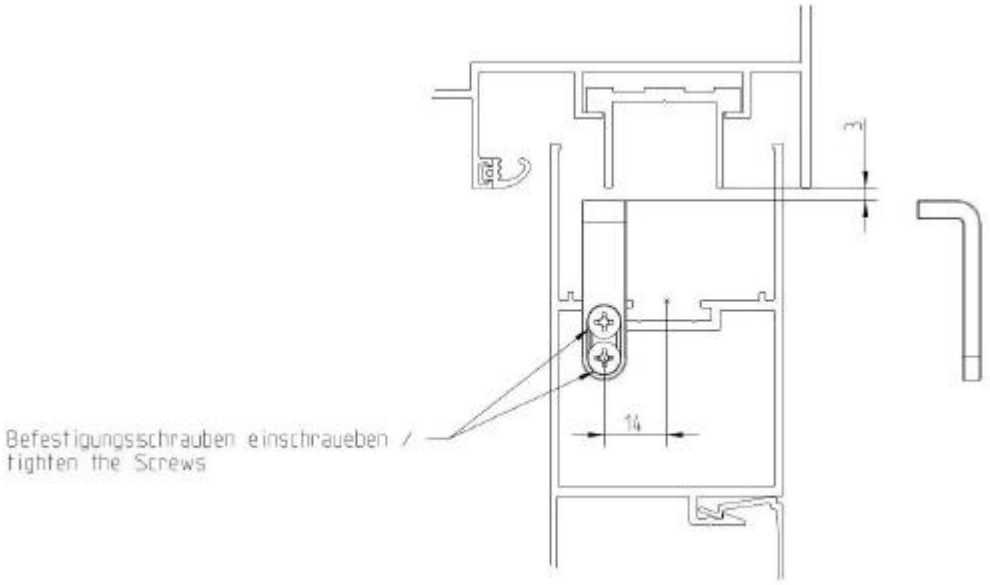

Variant 2: Drilling off the mounted sash

1. Mount the sash
2. Place the drilling jig on the sash as shown

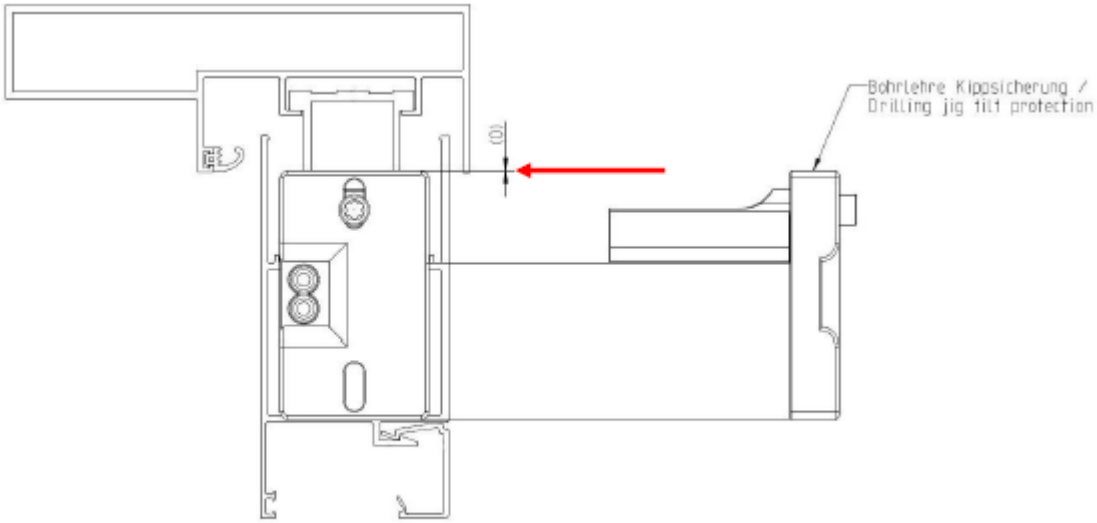

Wichtig: Die Oberkante der Bohrlehre muss an der Führungsschiene anliegen

Important: The upper edge of the drilling jig must lie against the guide rail.

3. Position the drilling jig and drill 2 x Ø 3.5 mm holes on the drilling jig
4. Fasten the anti-tilt device with 2 screws

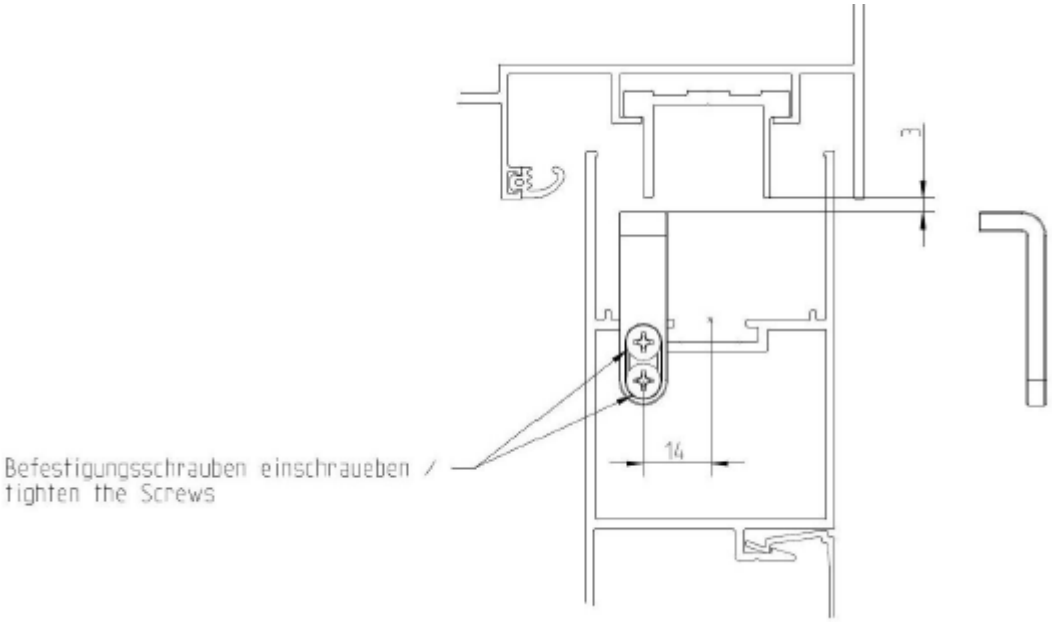

Conversion of drilling jig 2000345 from left to right application

- Anti-tilt device for espagnolette unit and centre break side, conversion required

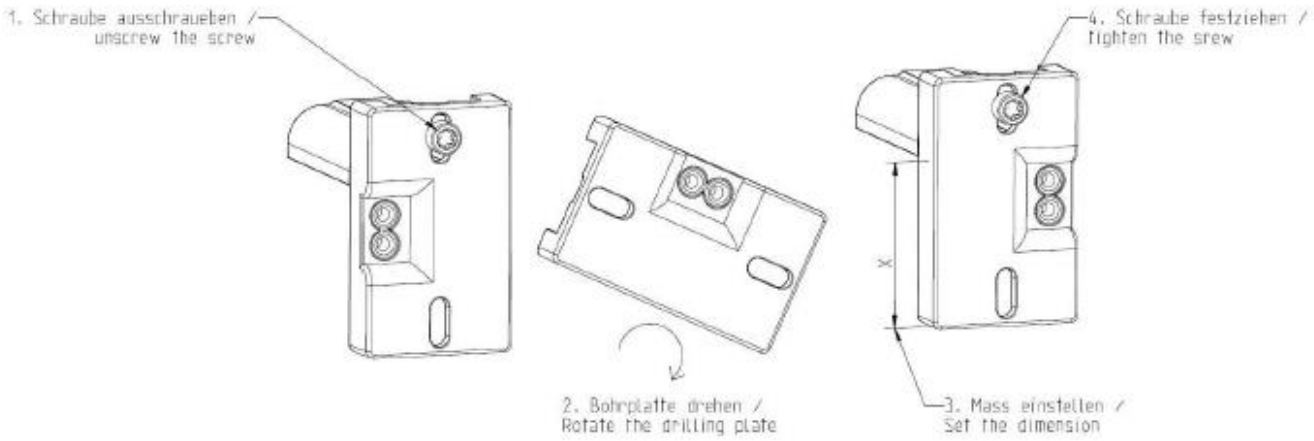

5. Aspect ratios of the competitive systems

- Unique selling point of Roto Inowa as of August 2021

	„Retract & Slide"	Lift & Slide	Tilt& Slide
Roto	**Inowa New: 3:1**	Patio Lift: 2,5:1	Patio Alversa: KS 2:1 PS 2,5:1 PS air/PS air Com: 2:1
Siegenia	Ecoslide: 2,5:1	Portal HS: 2,5:1	Portal PSK & PS: 2,5:1
Hautau	Atrium SP comfort: 2,5:1 Atrium Move 2,5:1	Atrium HS (330 & 440): 2,5:1	Atrium HKS: 2,5:1
Maco	s. Hautau	HS 300: 2.5:1	s. Hautau
GU	PSL: 2:1	HS: 2,5:1	No information available

Hauta and GU only 2: 1, **Inowa 3: 1 by a considerable margin!**

2.5: 1 is common with lift and slide systems

Max. 2,5:1